ES

2000

2001

2002

2003

ES

2050

2051

2052

2053

Scan the QR code for support information

vtech®

Congratulations

on purchasing your new VTech product. Before using this telephone, please read Important safety instructions.

This manual has all the feature operations and troubleshooting necessary to install and operate your new VTech telephone. Please review this manual thoroughly to ensure proper installation and operation of this innovative and feature rich VTech product.

Important safety instructions

When using your telephone equipment, basic safety precautions should always be followed to reduce the risk of fire, electric shock and injury, including the following:

1. Read and understand all instructions.
2. Follow all warnings and instructions marked on the product.
3. Unplug this product from the wall outlet before cleaning. Do not use liquid or aerosol cleaners. Use a damp cloth for cleaning.
4. Do not use this product near water (for example, near a bath tub, kitchen sink, swimming pool).
5. Do not expose the telephone to direct sunlight or extreme cold environment. Do not put the telephone close to heating sources such as radiators, cookers, etc.
6. Do not overload wall outlets and extension cords as this can result in the risk of fire or electric shock.
7. Unplug this product from the wall outlet and refer servicing to VTech/distributor under the following conditions:
   - When the power supply cord or plug is damaged or frayed.
   - If the product does not operate normally by following the operating instructions.
   - If the product has been dropped and the cabinet has been damaged.
   - If the product exhibits a distinct change in performance.
8. Avoid using a telephone (other than a cordless type) during an electrical storm. There may be a remote risk of electric shock from lightning.
9. Do not use the telephone to report a gas leak in the vicinity of the leak.
10. Use only the supplied NiMH (Nickel Metal Hydride) batteries! The operation periods for the handsets are only applicable with the default battery capacities.
11. The use of other battery types or non-rechargeable batteries/primary cells can be dangerous. These may cause interference and/or unit damages. The manufacturer will not be held liable for damage arising from such non-compliance.
12. Do not use third party charging bays. The batteries may be damaged.
13. Please note the correct polarity while inserting the batteries.
14. Battery should not be exposed to excessive heat such as bright sunshine or fire and immersed in water.
15. The batteries cannot be subjected to high or low extreme temperature and low air pressure at high altitude during use, storage or transportation. Disposal of batteries into fire or a hot oven, or mechanically crushing or cutting or the batteries can result in an explosion. Leaving the batteries in an extremely high temperature surrounding environment can result in an explosion or the leakage of flammable liquid of gas. Batteries subjected to extremely low air pressure may result in an explosion or the leakage of flammable liquid or gas.
16.

    Use only adaptors and battery listed below.
    - Use only the provided external power supply: Jiangxi Jian Aohai Technology Co., Ltd. Model: A318-060045W-EU1 | A318-060045W-UK1; VTech Telecommunications Limited. Model: VT05EEU06045 | VT05EUK06045.
    - Use only the supplied batteries: Yi Yang Corun Battery Co., Ltd. Model: Ni-MH AAA600mAh 1.2V; GPI International Ltd. Model: VT60AAAHC; Shenzhen Highpower Technology Co., Ltd. Model: HFR-AAA600.

Disposal of Old Equipment and Batteries (WEEE)

Only for European Union and countries with recycling systems

These symbols (a, b) on the products, packaging, and/or accompanying documents mean that used electrical and electronic products and batteries must not be mixed with general household waste. Batteries should also be removed from the device before scrapping. For proper treatment, recovery and recycling of old products and batteries, please take them to applicable collection points in accordance with your national legislation.

By disposing of them correctly, you will help to save valuable resources and prevent any potential negative effects on human health and the environment.

For more information about collection and recycling, please contact your local municipality. Penalties may be applicable for incorrect disposal of this waste, in accordance with national legislation.

Product disposal instructions for business users

If you wish to discard electrical and electronic equipment, please contact your dealer or supplier for further information.

Information on Disposal in other countries outside the European Union

These symbols (a, b) are only valid in the European Union. If you wish to discard these items, please contact your local authorities or dealer and ask for the correct method of disposal.

Note for the battery symbol

This symbol (b) might be used in combination with a chemical symbol. In this case it complies with the requirement set by the Directive for the chemical involved.

Recycle your device (WEEE directive 2012/19/EU)

The WEEE logo appears on the product to indicate that this product must not be disposed off or dumped with your other household wastes. You are liable to dispose of all your electronic or electrical waste equipment by relocating over to the specified collection point for recycling of such hazardous waste.

Approval and conformity

This product is intended for use within Europe and the UK. This equipment complies with the essential requirements to EU's Radio Equipment Directive (2014/53/EU) and the UK's Radio Regulations 2017 on radio systems and telecommunication equipment.
VTech Telecommunication Ltd. hereby declares that this telephone ES2000/ES2001/ES2002/ES2003/ES2050/ES2051/ES2052/ES2053 is in compliance with the essential requirements and other relevant provisions of EU's Radio Equipment Directive (2014/53/EU) and the UK's Radio Equipment Regulations 2017.

The declaration of conformity may be viewed at https://www.vtech.com/rtte-directive.

The CE symbol confirms the conformity of the telephone and the above directive.

Importer: VTech Electronics Europe Plc..
Napier Court, Abingdon Science Park, Abingdon, Oxon, OX14 3YT.

UKCA

Manufacturer: VTech Telecommunications Ltd.
23/F, Tai Ping Industrial Centre, Block 1, 57 Ting Kok Road, Tai Po, Hong Kong.

Technical Specifications

Frequency control	Crystal controlled PLL synthesizer
Transmit frequency	1.88GHz to 1.9GHz
RF power	<250mW
Channels	10
Nominal effective range	Actual operating range may vary according to environment conditions at the time of use
⚠ Power requirements	**Handset:** Battery: 1. Yi Yang Corun Battery Co., Ltd. Ni-MH AAA600mAh 1.2V 2. GPI International Ltd.; VT60AAAHC 3. Shenzhen Highpower Technology Co., Ltd.; HFR-AAA600 **Base / Charger:** Adaptor: 1. Jiangxi Jian Aohai Technology Co., Ltd. A318-060045W-EU1 (EU plug) | A318-060045W-UK1 (UK plug) 2. VTech Telecommunications Limited. VT05EEU06045 (EU plug) | VT05EUK06045 (UK plug) Input: 100-240V AC 50/60Hz 0.15A; Output: 6VDC 0.45A 2.7W
Power consumption	Operating condition Off mode: <1 W Network standby mode: <1 W

Limited Warranty

Customer Service and Product Warranty

IMPORTANT

Please retain the quick start guide with your sales receipt as proof of the date of purchase.

Customer Service

Please call our Customer Services Department at 0330 678 1988 or email to service-ukphone@vtechphones.eu and a service representative will be happy to help you.

PRODUCT WARRANTY

ONE YEAR PRODUCT WARRANTY

Thank you for choosing this quality product from VTech.

1. The product detailed above is covered by a one year warranty from the date of purchase, against any defects in materials or workmanship.
2. The product may be returned to the place of purchase. Alternatively the product can be returned to VTech Electronics Europe Plc (see address below), with proof of purchase, without proof of purchase no replacement will be provided.
3. VTech Electronics Europe Plc will examine the product and if it is found to be defective due to faulty materials or workmanship, will replace the product at their discretion.
4. If the product covered by this warranty is damaged due to misuse, modification or unauthorized repair, or because of faulty batteries, battery discharge or incorrect electrical connections, then this warranty becomes void.
5. This warranty is personal to the original purchaser and is not transferable.
6. Breakages to the LCD screen are not covered by the warranty.

VTech Electronics Europe Plc, c/o XPO Logistics, Warehouse 350, Cat & Fiddle Lane, West Hallam, DE7 6HE

THIS WARRANTY IS OFFERED AS AN EXTRA BENEFIT AND DOES NOT AFFECT CONSUMERS' STATUTORY RIGHTS.

This warranty is valid for the UK and Ireland only. For products purchased outside the UK and Ireland, please contact your local distributor or place of purchase.

Important safety instructions **3**
What is in the box **12**
Connect and charge **13**
Install the battery 13
Connect the telephone base 13
ES2000 series 13
ES2050 series 14
Connect the charger 14
Charge the battery 14
Check the battery level 16
Check for dial tone 16
If you do not hear a dial tone 16
Set date and time **16**
Operating range **16**
Handset Overview **17**
Handset display icons overview 19
Telephone base Overview **20**
ES2000 series 20
ES2050 series 20
Charger Overview **20**
Menu navigation **21**
In idle mode 21
ANS. MACHINE (ES2050 series only) 21
CALL BLOCKER 21
CALL LIST 21
PHONEBOOK 21
BS SETTINGS 21
HS SETTINGS 21
REGISTRATION 21
DEFAULT 21

Make, answer or end a call 22
Predial a call 22
Direct memory dial 22
Answer a call 22
End a call 22
Turn the handset ringer on/off 22
Turn the keypad lock on/off 22
Share call 22
To make a 3-way conversation 22
Adjust listening volume 22
To adjust the listening volume on a cordless handset 22
Call waiting 23
Redial list 23
Review a redial list entry 23
Store a redial number into the phonebook 23
Redial a call from list 24
Delete a redial list entry 24
Delete all redial entries 24
Find handset 24
To start paging 24
To end paging 24
Use the phone menu 25
Phonebook 25
Add a phonebook entry 25
Review the phonebook entries 26
Add a phonebook entry to VIP list 26
Review VIP entries 27
Remove a VIP entry 27
Remove all VIP entries 28
Check number of phonebook entry used 28
Dial a phonebook entry 28
Edit a phonebook entry 28
Delete a phonebook entry/ all entries 29
Call list 29
Review the call list 29
Save a call list entry to the phonebook 30
Save a call list entry to the black list 30
Dial a call list entry 30
Delete a call list entry 30
Set the type of calls to be stored in the call list 31
Call blocker 31
Set block mode 31
Set the type of calls to be blocked 32
Add a black list entry 33
Review the black list entries 33
Edit a black list entry 33
Delete a black list entry/all entries 34
Retrieve voicemail 34
Answering machine (ES2050 series only) 35
Message playback 35
Control the playback 35
Delete all messages 36
Message indicator on base 36
Record memo 37
Call intercept 37
Remote access 38
Turn on/off the answering machine 39

Handset settings **40**
Set languages 40
Set date and time 40
Set date format 40
Set time format 40
Set date and time 40
Ringer 41
Set ringer melody 41
Set ringer volume 41
Tone settings 42
Set key tone on/off 42
Set alert tones on/off 42
Alarm 42
Set alarm on/off and alarm time 42
Rename handset 43
Set auto answer 43
Direct memory 43
Set direct memory numbers 43
Base settings **44**
Ringer (ES2050 series only) 44
Set ringer volume (ES2050 series only) 44
Delete handset 44
Set dial mode 45
Change length of flash time 45
Change the system PIN 46
Turn on/off ECO mode 46
Register a handset **47**
Reset phone settings **47**
Answering machine and settings (ES2050 series only) **48**
Set your built-in answering machine 48
Set the answer mode 48
Select the answering machine language 48
Default outgoing message 49
Record your own outgoing message 49
Play and delete your outgoing message 49
Options during playback 49
Set answer delay 50
Set record time 50
Turn on/off the call screening 51
Turn on/off remote access 51
Change the remote access PIN 52
General product care **52**
Taking care of your telephone 52
Avoid rough treatment 52
Avoid water 52
Electrical storms 52
Cleaning your telephone 52
Storage 53
Frequently asked questions **53**

What is in the box

Your telephone package contains the following items. Save your sales receipt and original packaging in case it is necessary to ship your telephone for warranty service.

ES2000 series

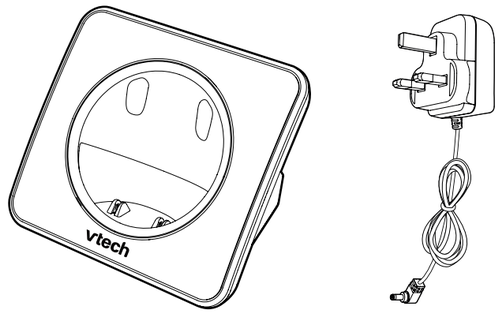

ES2050 series

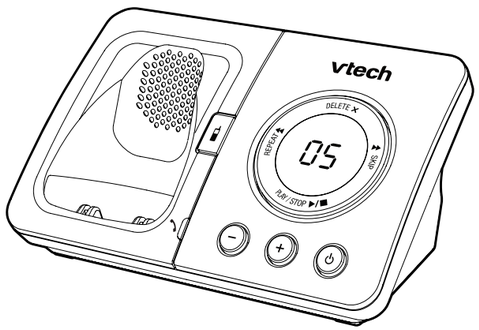

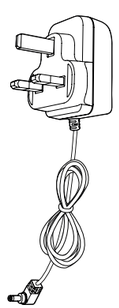

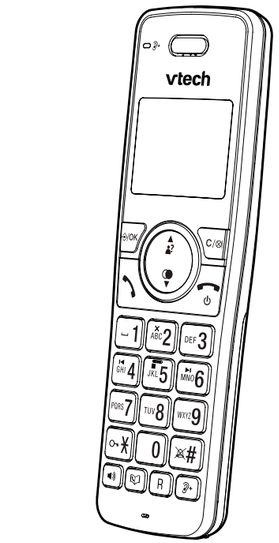

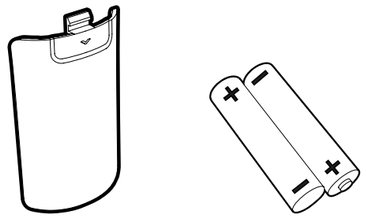

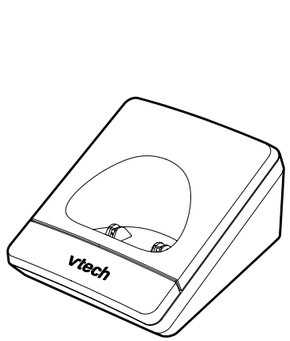

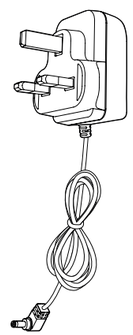

1 charger set for ES2001/ES2051
2 charger sets for ES2002/ES2052
3 charger sets for ES2003/ES2053

Connect and charge

Install the battery

NOTES

- Use only the battery provided.
- Charge the battery provided with this product only in accordance with the instructions and limitations specified in this manual.
- If the handset will not be used for a long time, disconnect and remove the battery to prevent possible leakage.

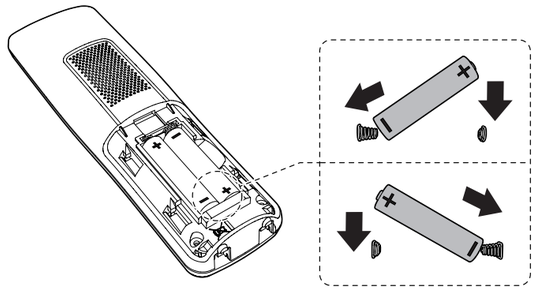

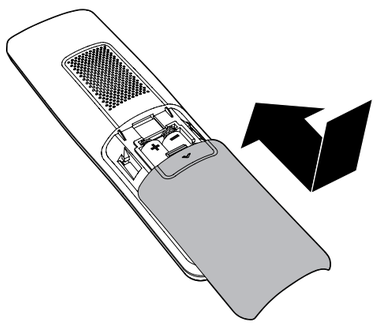

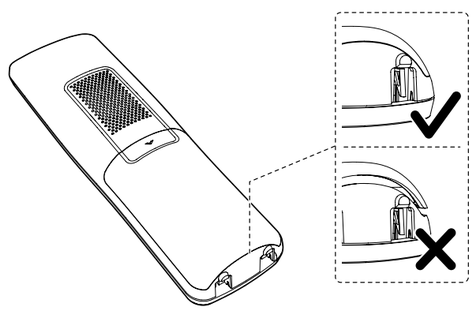

Connect the telephone base

NOTES

- Use only the adapters provided.
- Make sure the electrical outlets are not controlled by wall switches.
- Connect the power adaptor in a vertical or floor mount position only. The adapter's prong is not designed to hold the weight of unit, so do not connect it to any ceiling, under-the-table, or cabinet outlets. Otherwise, the adaptor may not properly connect to the mains.

ES2000 series

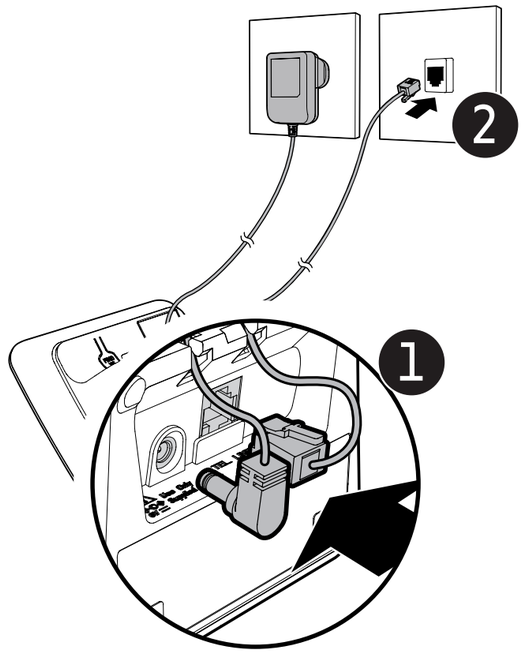

ES2050 series

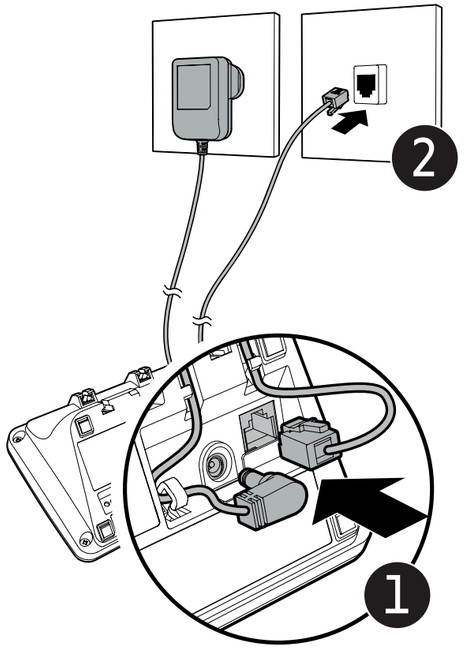

Connect the charger

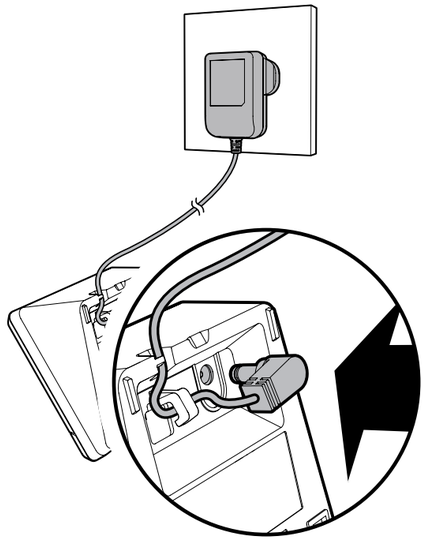

Charge the battery

Place the handset in the telephone base or charger to charge.

ES2000 series

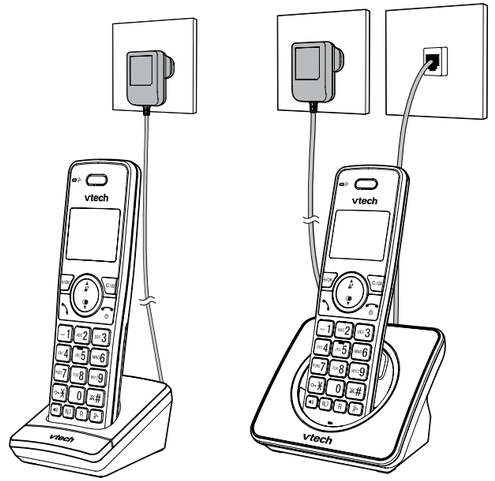

ES2050 series

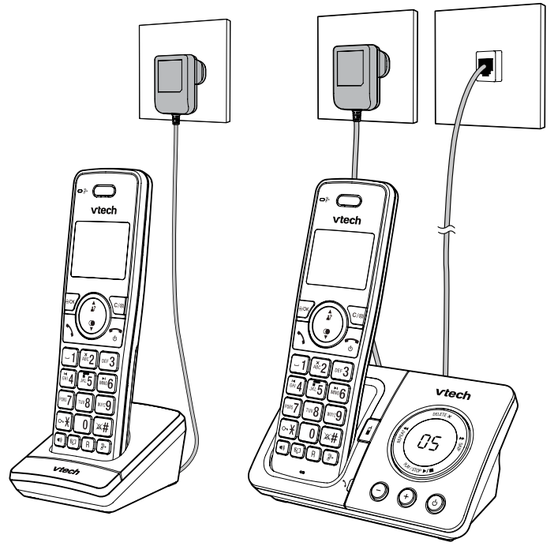

Once you have installed the battery, the handset LCD display indicates the battery status (see the table below).

Battery indicators	Battery status	Action
flashes	Battery has no charge or very little charge. The handset cannot be used.	Charge without interruption (at least 30 minutes).
→ → →	Battery icon animates when charging.	If full battery charging is reached, the icon will stop animation in cycle even the handset is on charging cradle.
steadily on	Battery is charged.	To keep the battery charged, place it in the telephone base or charger when not in use.

When it is fully charged, you can expect the following performance:

Operation	Operating time
While in handset use (talking*)	18 hours
While not in use (standby**)	10 days

* Operating times vary depending on your actual use and the age of the battery.
** Handset is not charging or in use.

NOTES

- Place the handset in the charger will bypass the set date and time, and voice guide.
- For best performance, keep the handset in the charger when not in use.
- The battery is fully charged after 16 hours of continuous charging.
- If you place the handset in the charger without plugging in the battery, the screen displays **No battery**.

Check the battery level

After you have installed the battery, check the battery level on the handset screen.

- If the battery icon is or , then go to **Set the date and time**.
- If the screen is blank, or flashes, then the battery needs to be charged. Go to **Charge the battery** before you do any setting or operation.

Check for dial tone

Press . If you can hear a dial tone, the installation is successful.

If you do not hear a dial tone

- Make sure the installation procedures described above are properly done.
- It may be a wiring problem. If you have changed your telephone service to digital service from a cable company or a VoIP service provider, the telephone line may need to be rewired to allow all existing telephone jacks to work. Contact your cable/VoIP service provider for more information.

Set date and time

Set the date and time before using the telephone system.

1. Press /OK when the phone is not in use.
2. Press ▼/▲ to choose **HS SETTINGS**, and then press /OK to select.
3. Press ▼/▲to scroll to **DATE & TIME** and then press /OK to select.
4. Press ▼/▲to scroll to **SET TIME** and then press /OK to select.
5. Use the dialing keys (**0-9**) to enter the hour (**HH**) and minute (**MM**). Then, press ▼ or ▲ to choose **AM** or **PM**. Then, press /OK.
6. Use the dialing keys (**0-9**) to enter the year (**YY**). Then, press /OK.
7. Use the dialing keys (**0-9**) to enter the date (**DD**) and month (**MM**). Then, press /OK to save.

Operating range

When the handset is out of range, the handset displays **Out of range** or **no pwr at base**.

If there is a call while the handset is out of range, it may not ring, or if it does ring, the call may not connect well when you press . Move closer to the telephone base, and then press to answer the call. If the handset moves out of range during a telephone conversation, there may be interference. To improve reception, move closer to the telephone base.

Handset Overview

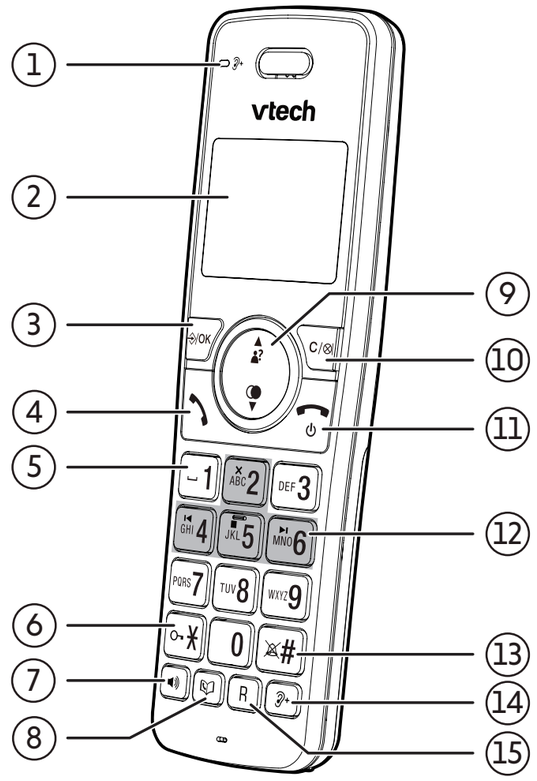

1	**Volume booster indicator**	
2	**LCD display**	
3	/OK	• Press to display the menu. • Once in the menu, press to select an item or save an entry or setting.
4		• Press to make or answer a call using the handset.

5	1	• Enter space character during text editing. • **Direct memory key 1**: when the phone is not in use, press to quick dial the stored number.
	2 ABC	• **Direct memory key 2**: when the phone is not in use, press to quick dial the stored number.
	3 DEF	• **Direct memory key 3**: when the phone is not in use, press to quick dial the stored number.
6	*	• Press and hold to lock or unlock the keypad.
7		• Press to turn on the handset speakerphone, press again to resume normal handset use.
8		• Press to review the phonebook.
9	▲	• Press to review the call list when the telephone is not in use. • Press to scroll up while in a menu or reviewing the phonebook, call list, or redial list. • Press to increase the listening volume when on a call, or increase the message playback volume. • While entering names or numbers, press to move the cursor to the left.

9		• Press to review the redial list when the telephone is not in use. • Press to scroll down while in a menu or reviewing the phonebook, call list, or redial list. • Press to decrease the listening volume when on a call, or decrease the message playback volume. • While entering names or numbers, press to move the cursor to the right.
10	C/⊗	• During a call, press to mute/ unmute the microphone. • Press to initiate an intercom call. • Delete digits while predialing.
11		• Hang up a call. • Return to the previous menu or idle mode without making changes. • Silence the handset ringer temporarily while the phone is ringing.
12	**ES2050 series only**	
	ABC 2	• Delete messages in the answering machine.
	GHI 4	• Repeat current message during message playback. • Press twice to skip to previous message.
	JKL 5	• Stop message playback.
	MNO 6	• Forward current message during message playback. • Skip to next message.

13	• Press and hold to turn the ringer on or off.
14	• During a call connection, press to enhance the clarity and loudness of the voice on the handset earpiece.
15 R	• Press to activate Recall for use with Telephone Network Services such as Call Waiting during a call.

Handset display icons overview

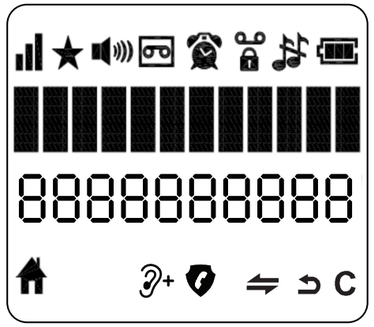

	• The battery is low and needs charging.
→ → →	• Animates when battery is charging.
	• On when the battery is fully charged.
	• On when the handset is within the range of the base. • Off when the handset is out of the coverage range.
	• On when new call is received.
	• Speakerphone is on.
	• Handset ringer is off.
	• On when there are new and unread voicemail messages.
	• Keypad lock is on.
	• Alarm alert is on.

	• Steadily ON: When answering machine is on. • Flash: When new TAM message is received.
	• Line is in use. • Flash when there is an incoming call.
	• Volume booster feature is turned on.
	• On when Block mode is turn to **On** and will block all unknown calls.
	• On when initiating an intercom call.
	• Press to go back to the previous menu or cancel the current operation.
C	• Press to clear a character or digit. • Press to stop the alarm. • Press to mute or unmute during a call.

Telephone base Overview

ES2000 series

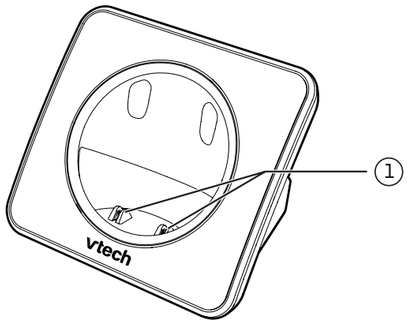

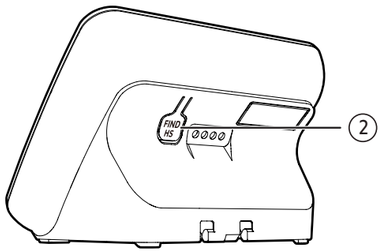

1	Charging pole	
2	**FIND HS**	Page all handsets.

ES2050 series

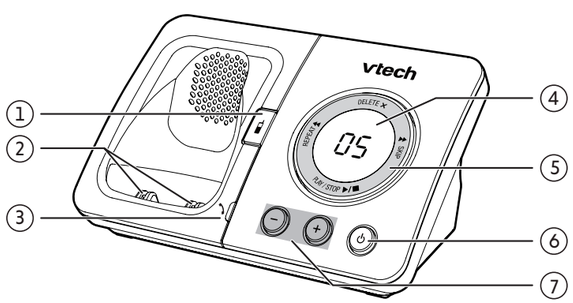

1		Page all handsets.
2	**Charging pole**	
3		In use indicator • On when the handset is in use, or when the answering system is answering an incoming call. • Flashes when another telephone is in use on the same line.
4	**New message indicator / Volume indicator**	
5	**DELETE ✕**	Delete message.
	▶▶ SKIP	Skip to next message.
	PLAY/ STOP ▶/■	• Play message. • Stop message.
	◀◀ REPEAT	Repeat message.
6	⏻	• Turn on or off the answering machine. • LED on when the answering machine is turned on.
7	−	Decrease listening volume.
	+	Increase listening volume.

Charger Overview

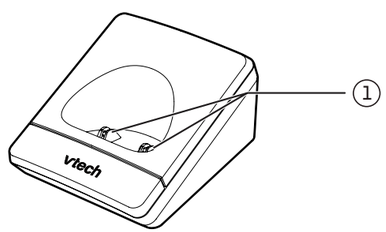

1	Charging pole

Menu navigation

In idle mode

1. Press ⇥/OK.
2. Press ▲/▼ of ▲ ▼ to scroll to a menu option.
3. Press ⇥/OK to select.

- You can also press ☎ to return to previous menu.
- Press and hold ☎ to return to idle mode.

ANS. MACHINE (ES2050 series only)	CALL BLOCKER
• MSG PLAYBACK • DEL ALL OLD • MEMO • TAM ON/OFF • TAM SETTINGS	• BLACK LIST • SETTINGS
CALL LIST	**PHONEBOOK**
Under a selected Call list entry • DETAILS • ADD TO PB • ADD TO BLIST • DELETE • DELETE ALL • CATEGORY	Under a selected Phonebook entry: • ADD • ADD TO VIP/DEL FROM VIP • VIEW • EDIT • DELETE • DELETE ALL • PB STATUS Under a selected VIP entry: • VIEW • DELETE • DELETE ALL
BS SETTINGS	**HS SETTINGS**
• BS RINGER (ES2050 series only) • RING VOLUME (ES2050 series only) • DELETE HS • DIAL MODE • FLASH TIME • CHANGE PIN • ECO MODE	• ALARM • RING SETUP • TONE SETUP • LANGUAGE • RENAME HS • AUTO ANSWER • DATE & TIME • DIRECT MEM.
REGISTRATION	**DEFAULT**
• PIN?	• PIN?

Make, answer or end a call

Predial a call

1. Enter the telephone number.
   - Press C/⊗ to make corrections.
2. Press ✆ to dial.

Direct memory dial

- When the phone is not in use, press and hold a direct memory key **1**, **2** or **3** if you have previously saved the numbers for quick dial (See **Direct memory**).

Answer a call

- Press ✆, or
- Lift the handset to answer if **AUTO ANSWER** is on.

End a call

- Press ✆ or place the handset in the handset charger.

Turn the handset ringer on/off

- Press and hold #.

Turn the keypad lock on/off

- Press and hold *.

Share call

You can use two cordless handsets at a time on an outside call.

To make a 3-way conversation

1. Press ⇨/OK on the handset during a call.
2. Press ▼/▲ to select **INTERCOM**.
3. Press ✆ to answer call on desination handset.
4. Press and hold * on the initiating handset.
   - **CONFERENCE** displays.

Adjust listening volume

To adjust the listening volume on a cordless handset

- During a call, press ▼/▲.

NOTES

- The handset and speakerphone volume settings are independent.
- When the volume reaches the minimum or maximum setting, you hear two beeps.

Call waiting

When you subscribe to call waiting service with your telephone service provider, you hear an alert tone if there is an incoming call while you are on another call.

- Press R to put the current call on hold and take the new call.
- Press R at any time to switch back and forth between calls.

If you also subscribe to caller ID service, it will let you see the name and telephone number of the caller during call waiting.

It may be necessary to change your telephone service to use this feature. Contact your telephone service provider if:

- You have both caller ID and call waiting, but as separate service (you may need to combine these service);
- You have only caller ID service, or only call waiting service; or
- You do not subscribe to caller ID or call waiting services.

There are fees for caller ID services. In addition, services may not be available in all areas.

Redial list

Review a redial list entry

1. Press ▼ to enter the redial list.
2. Press ▼/▲ repeatedly to browse until the desired entry displays.

NOTE

- You hear a double beep when you reach the beginning or end of the redial list.

Store a redial number into the phonebook

1. Press ▼ to enter the redial list.
2. Press ▼/▲ repeatedly to browse until the desired entry displays.
3. Press ⇨/OK and then press ▼/▲ to select **ADD TO PB**.
4. Press ⇨/OK to enter name.
5. Press ⇨/OK to enter number.
6. Press ⇨/OK and then press ▼/▲ to select **MELODY 1** to **MELODY 10**.
7. Press ⇨/OK to confirm.

Redial a call from list

1. Press ▼ to enter the redial list.
2. Press ▼/▲ repeatedly to browse until the desired entry displays.
3. Press to dial.

NOTE

- If there is no number in the list, the display shows **EMPTY**.

Delete a redial list entry

1. Press ▼ to enter the redial list.
2. Press ▼/▲ repeatedly to browse until the desired entry displays.
3. Press /OK, and then press ▼/▲ to select **DELETE**.
4. Press /OK twice to confirm.

Delete all redial entries

1. Press ▼ to enter the redial list.
2. Press ▼/▲ repeatedly to browse until the desired entry displays.
3. Press /OK, and then press ▼/▲ to select **DELETE ALL**.
4. Press /OK twice to confirm.

Find handset

This feature helps you find all system handsets.

CAUTIONS

- Do not press and hold **FIND HS** (ES2000 series) or (ES2050 series) for more than four seconds. It may lead to handset deregistration.
- If the handset displays **To register HS...** and **...see manual**, refer to **Frequent asked questions** to register the handset back to the telephone base.

To start paging

Press **FIND HS** (ES2000 series) or (ES2050 series) on the telephone base.

- All idle handsets ring and display **PAGING**.

NOTE

- Paging tone continues on the other handset.

To end paging

- Press **FIND HS** (ES2000 series) or (ES2050 series) again on the telephone base;
- Press , C/⊗, on the handset; **or**
- Place the handset in the handset base / charger.

NOTE

- Paging tone stops when paging stops.

Use the phone menu

1. Press /OK when the phone is not in use.
2. Press ▼/▲ until the screen displays the desired feature menu.
3. Press /OK to select and enter the menu.

- To return to the previous menu, press C/⊗ on the phone.
- To return to idle mode, press and hold C/⊗ on the phone.

Phonebook

The phonebook can store up to 100 entries which is shared with the black list. Each entry may consist of a telephone number up to 24 digits, and a name up to 12 characters.

You can mark a phonebook entry as a VIP, and a VIP entry will be marked with a .

Add a phonebook entry

1. Press /OK, and then press ▼/▲ to choose **PHONEBOOK**. Press /OK to confirm.
2. Press /OK again to choose **ALL CONTACTS**.
   - If you have entries in the list, they will be displayed. Press /OK and **ADD** displays.
   - If there is no entry in the list, the display shows **EMPTY**. Press /OK and **ADD** displays.
3. Press /OK again to add entry.
   - **NAME** displays.
4. Enter the name of the phonebook entry.
   - Press /OK to confirm.
   - Press 1 to add a space.
   - Press C/⊗ to delete.
   - **NUMBER** displays.

5. Press ⇨/OK, and then enter the telephone number of the entry.
   - Press ⇨/OK to confirm.
   - Press C/⊗ to delete.
   - **MELODY 1** displays.
6. Press ▼/▲ to select your preferred ringtone from **MELODY 1** to **MELODY 10**.
7. Press ⇨/OK to confirm the entry.
   - Press C/⊗ to delete.

Review the phonebook entries

Entries are sorted alphabetically.

1. Press 📖 when the cordless handset is not in use.
   - The screen displays the first entry.
2. Press ▼/▲ to browse through the entries, or use the dialing keys to start a name search.

-OR-

1. Press ⇨/OK when the phone is not in use.
2. Press ▼/▲ to choose **PHONEBOOK**, and then press ⇨/OK to select.
3. Press ⇨/OK again to choose **ALL CONTACTS**.
4. The screen displays the first entry. Press ▼/▲ to browse through the entries.
5. Press⇨/OK when the desired entry displays.
6. Press ▼/▲ to choose **VIEW**, and then press ⇨/OK to select.

NOTE

- You hear a double beep when you reach the beginning or end of the list.

Add a phonebook entry to VIP list

1. Press 📖 when the cordless handset is not in use.
   - The screen displays the first entry.
2. Press ▼/▲ to browse through the entries, or use the dialing keys to start a name search.

-OR-

1. Press ⇨/OK, and then press ▼/▲ to choose **PHONEBOOK**. Press ⇨/OK to confirm.
2. Press ⇨/OK again to choose **ALL CONTACTS**.
   - The screen displays the first entry. Press ▼/▲ to browse through the entries.
3. When the desired entry displays, press ⇨/OK to select.
   - **ADD** displays.
4. Press ▼/▲ to choose **ADD TO VIP** and then press ⇨/OK to confirm.

NOTE

- VIP entry will be marked with a ⁘.

Review VIP entries

Entries are sorted alphabetically.

1. Press ⇨/OK when the phone is not in use.
2. Press ▼/▲ to choose **PHONEBOOK**, and then press ⇨/OK to select.
3. Press ▼/▲ to choose **VIP**, then press ⇨/OK to confirm.
4. The screen displays the first entry. Press ▼/▲ to choose browse through the entries.
5. Press⇨/OK when the desired entry displays.
6. Press ▼/▲ to choose **VIEW**, and then press ⇨/OK to select.

Remove a VIP entry

Method 1:

1. Press 📖 when the cordless handset is not in use.
   - The screen displays the first entry.
2. Press ▼/▲ to browse through the entries, or use the dialing keys to start a name search.

-OR-

1. Press ⇨/OK, and then press ▼/▲ to choose **PHONEBOOK**. Press ⇨/OK to confirm.
2. Press ⇨/OK again to choose **ALL CONTACTS**.
   - The screen displays the first entry. Press ▼/▲ to browse through the entries.
3. When the desired entry displays, press ⇨/OK to select.
   - **ADD** displays.
4. Press ▼/▲ to choose **DEL FROM VIP** and then press ⇨/OK to confirm.

Method 2:

1. Press ⇨/OK, and then press ▼/▲ to choose **PHONEBOOK**. Press ⇨/OK to confirm.
2. Press ▼/▲ to choose **VIP**. Press ⇨/OK to confirm.
   - The screen displays the first VIP entry. Press ▼/▲ to browse through the VIP entries.
3. When the desired entry displays, press ⇨/OK to select.
4. Press ▼/▲ to choose **DELETE**, and then press ⇨/OK to select and confirm.

NOTE

- The VIP entry will be removed from the VIP list but will remain in the phonebook entries. If you want to delete the entry from both VIP list and phonebook, see **Delete a phonebook entry/all entries**.

Remove all VIP entries

1. Search for the desired entry in the VIP list (see **Review VIP entries**).
2. When the desired entry displays, press ⇆/OK to select.
   - **VIEW** displays.
3. Press ▼/▲ to select **DELETE ALL**, and then press ⇆/OK twice to select and confirm.
   - All VIP entries will be removed from the list, but the entry will remain in the phonebook entries.

Check number of phonebook entry used

1. Press 📖 when the cordless handset is not in use.
2. Press ⇆/OK again and then press ▼/▲ to choose **PB STATUS**.
3. Press ⇆/OK again to select.
   - e.g. **09/100 USED** displays.

-OR-

1. Press ⇆/OK when the phone is not in use.
2. Press ▼/▲ to choose **PHONEBOOK**, and then press ⇆/OK to select.
3. Press ⇆/OK again to choose **ALL CONTACTS**.
   - The screen displays the first entry in the phonebook.
4. Press ⇆/OK and then ▼/▲ to choose **PB STATUS**.
5. Press ⇆/OK again to select.
   - e.g. **09/100 USED** displays.

Dial a phonebook entry

1. Search for the desired entry in the phonebook (see **Review the phonebook entries** or **Review VIP entries**).
2. Press ▼/▲ to select the desired entry and then press 📞 to dial.

Edit a phonebook entry

1. Search for the desired entry in the phonebook (see **Review the phonebook entries**).
2. When the desired entry displays, press ⇆/OK to select.
   - **ADD** displays.
3. Press ▼/▲ to select **EDIT**, and then press ⇆/OK to select.
   - Press C/⊗ to delete the name and number.
   - Re-enter new name and number and select the ringer melody.
   - Press ⇆/OK to save.
   - You hear a confirmation tone.

Delete a phonebook entry/ all entries

1. Search for the desired entry in the phonebook (see **Review the phonebook entries**).
2. When the desired entry displays, press ⇆/OK to select.
   - **ADD** displays.
3. Press ▼/▲ to select **DELETE**, and then press ⇆/OK twice to select and confirm.
   - The entry is deleted, and you hear a confirmation tone.

NOTE

- If you want to delete all phonebook entries, press ▼/▲ to select **DELETE ALL** instead of **DELETE**.
- Entries will be deleted from both VIP list and phonebook.

Call list

This feature is available if you have subscribed to the Caller ID service from your local service provider telephone company.

The call list can store up to 20 entries. Each entry may consist of a telephone number up to 24 digits, and a name up to 12 characters. Both answered and unanswered calls will be stored in the call list.

Voicemail calls received from your telephone service provider will also be saved in the call list.

Review the call list

Review the call list to find out who called, to return the call, or to copy the caller's name and number into your phonebook.

Latest call is put at the top of the call list. When the call list is full, the oldest call will be replaced by a new call. The unanswered call which has not been read is marked with a ⁘.

1. Press ▲ 👤? when the phone is not in use.

   - OR -

   Press ⇆/OK and ▼/▲ to select **CALL LIST**. Press ⇆/OK to confirm.
   - The screen displays the first entry in the call list.
2. Press ▼/▲ to browse. When the desired entry displays, press ⇆/OK to select.
   - The screen displays **DETAILS**.
3. Press ⇆/OK to review the details.
   - The screen displays the caller's name and the date and time of the call.
   - Press * will toggle between the caller's number and name.

Save a call list entry to the phonebook

1. Search for the desired call list entry (see **Review the call list**).
2. When the desired entry displays, press ⊕/OK to select.
   - The screen displays **DETAILS**.
3. Press ▼/▲ to choose **ADD TO PB**, and then press ⊕/OK to select.
   - The screen displays the telephone number.
4. Use the dialing keys to enter the name, and then press ⊕/OK to save.
   - The name and number display.
   - Use the dialing keys to edit the number, if necessary.
5. Press ⊕/OK to save.
   - **MELODY 1** displays.
6. Press ▼/▲ to select your preferred ringtone from **MELODY 1** to **MELODY 10**.
7. Press ⊕/OK to save.
   - You hear a confirmation tone.

While entering names and numbers

- Press ▼/▲ to move the cursor to the left or right.
- Press C/⊗ to erase a digit.
- Press and hold C/⊗ to erase all digits.
- Press ␣ 1 to add a space.

Save a call list entry to the black list

1. Search for the desired call list entry (see **Review the call list**).
2. When the desired entry displays, press ⊕/OK to select.
   - The screen displays **DETAILS**.
3. Press ▼/▲ to select **ADD TO BLIST**, and then press ⊕/OK to select.
4. Use the dialing keys to enter the name, and then press ⊕/OK.
   - The name and number display.
5. Press ⊕/OK again to save.
   - You hear a confirmation tone.

Dial a call list entry

1. Search for the desired call list entry (see **Review the call list**).
2. When the desired entry displays, press ✆ to dial.

Delete a call list entry

1. Search for the desired call list entry (see **Review the call list**).
2. When the desired entry displays, press ⊕/OK to select.
   - Press ▼/▲ to until the screen displays **DELETE**. Press ⊕/OK twice to select and confirm.
   - The entry is deleted, and you hear a confirmation tone.

NOTE

- If you want to delete all call list entries, press ▼/▲ to select **DELETE ALL** instead of **DELETE**.

Set the type of calls to be stored in the call list

1. Press ▲ 👤? when the phone is not in use.
   - OR -
   Press ⊕/OK and ▼/▲ to select **CALL LIST**. Press ⊕/OK to confirm.
2. Press ⊕/OK to display the options. Press ▼/▲ to select **CATEGORY**, and then press ⊕/OK to confirm.
3. Press ▼/▲ to select **ALL CALLS** or **MISSED CALLS**.
4. Press ⊕/OK to save.

NOTE

- **ALL CALLS** will store the calls of answered calls and unanswered calls. **MISSED CALLS** will only store those unanswered calls.

Call blocker

If you have subscribed to Caller ID service, you can use the call blocker feature to block certain calls automatically.

You can block calls by adding the numbers into the Black List. The Black List can store up to 100 entries which is shared with the phonebook.

You can also block or allow certain types of calls, for example, calls that have hidden their caller ID, calls without caller ID, international calls or calls made from payphones.

You can also choose to block all calls or allow certain calls in the VIP list.

When a call is blocked, the telephone will not ring.

Set block mode

1. Press ⊕/OK when the phone is not in use.
2. Press ▼/▲ to scroll to **CALL BLOCKER**, and then press ⊕/OK to select.
3. Press ▼/▲ to scroll to **SETTINGS**, and then press ⊕/OK to select.
4. Press ⊕/OK again to choose **BLOCK MODE**.
5. Press ▼/▲ to choose **BLOCK ALL/ ALLOW VIP/BLOCK BLIST/OFF**, and then press ⊕/OK to select.
   - **BLOCK ALL** - block all unknown calls except numbers stored in the phonebook and VIP list.

- **ALLOW VIP** - only allow numbers stored in the VIP list. All other calls will be blocked.
- **BLOCK BLIST** - Only block calls with numbers stored in the Black List.

6. Press ▼/▲ to choose **ALWAYS ON** or **TIMED**, and then press ⇳/OK to select.
   - If you choose **OFF**, the setting will end here. The telephone will ring even the number is added in the black list.
   - If you choose **TIMED**, you will need to continue and set the time period.
7. Use the dialing keys to enter the time to set block mode on, and then press ⇳/OK to confirm.
8. Use the dialing keys to enter the time to set block mode off, and then press ⇳/OK to save.

Set the type of calls to be blocked

1. Press ⇳/OK when the phone is not in use.
2. Press ▼/▲ to scroll to **CALL BLOCKER**, and then press ⇳/OK to select.
3. Press ▼/▲ to scroll to **SETTINGS**, and then press ⇳/OK to select.
4. Press ▼/▲ to scroll to **CALL TYPE**, and then press ⇳/OK to select.
5. Press ▼/▲ to select **WITHHELD/ INTERNAT'L/UNAVAILABLE/ PAYPHONE**, and then press ⇳/OK to select.
   - **WITHHELD** - block all calls that hide its caller ID.
   - **INTERNAT'L** - block all international calls.
   - **UNAVAILABLE** - block all calls without caller ID.
   - **PAYPHONE** - block all calls made from payphones.
6. Press ▼/▲ to scroll to **ON** or **OFF**.
7. Press ⇳/OK to save.

NOTE

- You can set any or all of the four types of calls to be blocked.

Add a black list entry

1. Press ⇳/OK, and then press ▼/▲ to choose **CALL BLOCKER**. Press ⇳/OK to confirm.
2. Press ⇳/OK again to choose **BLACK LIST**.
   - If you have entries in the list, they will be displayed. Press ⇳/OK and **ADD** displays.
   - If there is no entry in the list, the display shows **EMPTY**. Press ⇳/OK and **ADD** displays.
3. Press ⇳/OK again to add entry.
   - **NAME** displays.
4. Enter the name of the black list entry.
   - Press ⇳/OK to confirm.
   - Press ␣ 1 to add a space.
   - Press C/⊗ to delete.
   - **NUMBER** displays.
5. Press ⇳/OK, and then enter the telephone number of the entry.
   - Press C/⊗ to delete.
6. Press ⇳/OK to save the entry.

Review the black list entries

Entries are sorted alphabetically.

1. Press ⇳/OK, and then press ▼/▲ to choose **CALL BLOCKER**. Press ⇳/OK to confirm.
2. Press ⇳/OK again to choose **BLACK LIST**.
   - The screen displays the first entry.
3. Press ▼/▲ to browse through the entries, or use the dialing keys to start a name search.

NOTE

- You hear a double beep when you reach the beginning or end of the list.

Edit a black list entry

1. Search for the desired entry in the black list (see **Review the black list entries**).
2. When the desired entry displays, press ⇳/OK to select.
   - **ADD** displays.
3. Press ▼/▲ to select **EDIT**, and then press ⇳/OK to select.
   - Press C/⊗ to delete the name and number.
   - Re-enter new name and number.
   - Press ⇳/OK to save.
   - You hear a confirmation tone.

Delete a black list entry/all entries

1. Search for the desired entry in the black list (see **Review the black list entries**).
2. When the desired entry displays, press ⊕/OK to select.
   - **ADD** displays.
3. Press ▼/▲ to select **DELETE**, and then press ⊕/OK twice to select and confirm.
   - The entry is deleted, and you hear a confirmation tone.

NOTE

- If you want to delete all black list entries, press ▼/▲ to select **DELETE ALL** instead of **DELETE**.

Retrieve voicemail

When you received a voicemail, the handset displays **New voicemail** and/or .

To retrieve, you typically dial an access number provided by your telephone service provider, and then enter a security code. Contact your telephone service provider for instructions on how to configure the voicemail settings and listen to messages.

NOTE

- After you have listened to all new voicemail messages, the indicators on the screen turn off automatically.

Answering machine (ES2050 series only)

Message playback

If you have new messages, the telephone plays only the new messages (oldest first). If there are no new messages, the telephone plays back all messages (oldest first).

NOTE

- Make sure you **Set date and time** correctly.

1. Press ⊕/OK when the phone is not in use.
2. Press ⊕/OK to select **ANS. MACHINE**.
3. Press ⊕/OK again to select **MSG PLAYBACK**.
   - If there is no message, the the display shows **TAM EMPTY** and returns to previous menu option
   - If there is a message, the displays shows the date and time (10-21 11-05), i.e. on October 21st and at 11:05 am, following the date and time format selected in **DATE & TIME** settings (See **Handset settings**).
   - Press ⊕/OK to control the playback.

The first received message will play first, while the new voice message is indicated by a ★ icon. Once the message is played, it will be saved automatically and the ★ icon will disappear.

Control the playback

Using the handset:

1. Press ⊕/OK when the phone is not in use.
2. Press ⊕/OK to select **ANS. MACHINE**.
3. Press ⊕/OK again to select **MSG PLAYBACK**.
4. Press ⊕/OK to displays **STOP**, **FORWARD**, **PREVIOUS**, and **DELETE** options.
   You can also press the keys on your handset to control.
   - **STOP** (JKL 5) - Message playback stops and return to previous menu.
   - **FORWARD** (MNO 6) - Play the next new messsage if available.
   - **PREVIOUS** (GHI 4) - Play the current message from the beginning.
   - **DELETE** (ABC 2) - Delete currently play message and continue to play the next message if available. If there is no more message, it will return to previous menu option.
   - You can adjust the volume by pressing ▼/▲.

Using the telephone base:

- Press ▶/■ to start or stop message playback.
- Press ▶▶ to play the next new messsage if available.
- Press ◀◀ to play the current message from the beginning.
- Press ✕ to delete currently play message and continue to play the next message if available.
- Pressing + / — to adjust the volume.

Delete all messages

If you want to delete all the old messages, you can:

Using the handset:

1. Press ⌯/OK when the phone is not in use.
2. Press ⌯/OK to select **ANS. MACHINE**.
3. Press ▼/▲ to scroll to **DEL ALL OLD**, and press ⌯/OK.
   - The display shows **CONFIRM?**
4. Select and press ⌯/OK to confirm, or C/⊗ to return to previous menu option.

Using the telephone base:

- When the telephone is not in use, press and hold ✕ to delete all messages.

Message indicator on base

Display	Description
0F-> --	Answering machine is **OFF**.
--	Answering machine is **OFF** and no new answering machine messages received.
0F /XX	Flashing **XX** alternatively with **OF**: Answering machine is **OFF** and there are **XX** new voice messages received where **XX** is from **01** to **59**.
0n-> XX	Answering machine is **ON** and **XX** is the number of messages in the answering machine memory.
00	Steadily on: No voice messages in the answering machine.
XX	Flash: There are **XX** new voice messages received where **XX** is from **01** to **59**.
	Steadily on: Playing the current **XX** incoming old message. Flashing: Playing the current **XX** incoming new message.
ZZ	Steadily on: There are **ZZ** old voice messages kept in the answering machine memory (no new voice messages).
XX/FF	Flashing **XX** alternatively with **FF**: There are **XX** new voice messages received where **XX** is from **01** to **59** and the answering machine memory is full.
FF	Flashing **FF**: The answering machine memory is full and there are no new messages, and only old messages are kept.
- - /XX	Flashing **XX** alternatively with **- -**: Time is not set and there are **XX** new voice messages received where **XX** is from **01** to **59**.
- -	Flashing **- -**: Time is not set and there are old voice messages kept in the the answering machine memory only (no new voice messages).
A1/A2	Steadily on: Playing the current outgoing message (OGM) where **A1** is the Answer & Record OGM and **A2** is the Answer Only OGM.
XX/An	Flashing **XX** alternatively with **An**: **XX** new incoming message is now recording. **An** denotes that the incoming message recording is in progress.
rA	Flashing: Remote access is in progress.
LX	Steadily on: Indicate the current volume level where **X** is from **1** to **8** (non-cyclic).

Record memo

Regardless the answering machine is on or off, you can record memos as reminders for yourself.

1. Press ⌯/OK when the phone is not in use.
2. Press ⌯/OK to select **ANS. MACHINE**.
3. Press ▼/▲ to scroll to **MEMO**, and press ⌯/OK. It will start recording.
   - Select and press ⌯/OK to stop and save the recording, or
   - Select and press C/⊗ to stop the recording without saving and then to return to previous menu option.

Call intercept

To talk to the person whose message is being recorded, you can press 📞 or 🔊 on the handset.

Remote access

Your phone lets you check your messages, or otherwise operate your answering machine, by calling the answering machine when you are away from home and then dialling a 4-digit remote access PIN from a tone-dialling phone. The 4-digit remote access PIN code is used to prevent other people from unauthorised access of your answering machine.

Make sure that Remote Access is turned on (see **Turn on/off remote access** section) and then you can ring your phone from another tone-dialling phone to switch the answering machine on or off, and/or listen to your messages remotely.

Access your answering machine remotely:

1. Place a call from a tone-dialling phone to your phone.
2. When the answering machine answers the call and starts playing the outgoing message, press the * key. The outgoing message will stop playing.
3. Enter the 4-digit Remote Access PIN (default PIN is **0000**). You will hear a single confirmation beep if the PIN is accepted, and you then need to press **5** to start playing any messages.

NOTES

- The * must be entered while the outgoing message is still playing, and the 4-digit PIN should follow without any delays.
- If the 4-digit Remote Access PIN is entered incorrectly you will hear three error beeps, and you can try again, but if it happens three times consecutively, the line will be released automatically.

4. Press the following keys to carry out your desired function.

Keys	Functions	
	While message is not playing	**While message is playing**
2		Delete the current message playing.
4		Press once to repeat the current message from the beginning. Press twice to skip back to play the previous message.
5	Start playing messages.	Stop the current message playback.
6		Skip to play the next message.
7	Turn on the answering machine.	
8		Stop the current message playback.
9	Turn off the answering machine.	

NOTES

- If your answering machine is turned off but Remote Access is turned on, the phone will enter into the remote access mode after 14 rings and play the **ANSWER ONLY** outgoing message.
- You can then enter the * key and the 4-digit remote access PIN (Default PIN: **0000**) to activate the remote access feature. When your answering machine memory is full and the answer mode is set to Answer & Record, the answer mode will change to Answer Only automatically. It will change back to **ANS & REC** (Answer & Record) mode automatically after some messages have been deleted.

Turn on/off the answering machine

By default, your answering machine is ON. You can select to turn on or off the system.

Using the handset:

1. Press ⇨/OK when the phone is not in use.
2. Press ⇨/OK to select **ANS. MACHINE**.
3. Press ▼/▲ to scroll to **TAM ON/OFF**, and press ⇨/OK.
4. Press ▼/▲ to scroll to **ON** or **OFF**.
5. Select **ON** and press ⇨/OK to turn on the system The icon displays when idle.

   -OR-

   Select **OFF** and press ⇨/OK to turn off the system, and the icon disappear when idle.

   - Press C/⊗ to return to previous menu option.

Using the telephone base:

- Press ⏻ to turn on or off the answering machine.

Set languages

The LCD language is preset to German. You can select English, French, Italian, Spanish, Portuguese or Dutch to be used in all screen displays.

1. Press ⊕/OK when the phone is not in use.
2. Press ▼/▲ to choose **HS SETTINGS**, and then press ⊕/OK to select.
   - **ALARM** displays.
3. Press ▼/▲to scroll to **LANGUAGE**, and then press ⊕/OK to select.
4. Press ▼/▲ to choose **ENGLISH**, **DEUTSCH**, **FRANÇAIS**, **ITALIANO**, **ESPAÑOL**, **PORTUGUÊS** or **NEDERLANDS**, and then press ⊕/OK to select.
   - The screen returns to the previous menu.
   - You hear a confirmation tone.

Set date and time

1. Press ⊕/OK when the phone is not in use.
2. Press ▼/▲ to choose **HS SETTINGS**, and then press ⊕/OK to select.
3. Press ▼/▲to scroll to **DATE & TIME** and then press ⊕/OK to select.
4. Press ▼/▲to scroll to
   - **DATE FORMAT**
   - **TIME FORMAT**
   - **SET TIME**

Set date format

1. Follow **Set date and time** and reach **DATE FORMAT**. Press ⊕/OK to select.
2. Press ▼/▲ to choose **DD-MM-YY** or **MM-DD-YY** format.
3. Press ⊕/OK to save.

Set time format

1. Follow **Set date and time** and reach **TIME FORMAT**. Press ⊕/OK to select.
2. Press ▼/▲ to choose **12HR** or **24HR** format.
3. Press ⊕/OK to save.

Set date and time

1. Follow **Set date and time** and reach **SET TIME**. Press ⊕/OK to select.
2. Use the dialing keys (**0-9**) to enter the hour (**HH**) and minute (**MM**). Press ⊕/OK to save.
3. Use the dialing keys (**0-9**) to enter the year (**YYYY**), and then press ⊕/OK to save.
4. Use the dialing keys (**0-9**) to enter the date (**DD**) and month (**MM**). Then, press ⊕/OK to save.
   - The screen returns to the previous menu.
   - You hear a confirmation tone.

Ringer

1. Press ⊕/OK when the phone is not in use.
2. Press ▼/▲ to choose **HS SETTINGS**, and then press ⊕/OK to select.
3. Press ▼/▲ to choose **RING SETUP**, and then press ⊕/OK to select. There are 3 options:
   - **EXT. RING** - External call ringtone
   - **INT. RING** - Internal call ringtone
   - **RING VOLUME** - Ringer volume

Set ringer melody

You can choose from different ringer melody for each handset.

1. Follow **Ringer** and reach **RING SETUP** option.
2. Press ▼/▲ to choose **EXT. RING** or **INT. RING**.
3. Press ⊕/OK.
4. Press ▼/▲ to select your preferred ringtone from **MELODY 1** to **MELODY 10**.
   - ⁘ displays next to the current selection.
5. Press ⊕/OK to save.
   - You hear a confirmation tone.

Set ringer volume

You can set the ringer volume or turn the ringer off on each handset.

When the ringer is off, 🔕 appears on the screen.

1. Follow **Ringer** and reach **RING SETUP** option.
2. Press ▼/▲ to choose **RING VOLUME**, and then press ⊕/OK to select.
3. Press ▼/▲ to select from **VOLUME OFF** to **VOLUME 5**, and then press ⊕/OK to select and save.
   - ⁘ displays next to the selection.
   - You hear a confirmation tone.

NOTE

- If the ringer volume is set to off, that handset is silenced for all incoming calls except paging tone.

Tone settings

Set key tone on/off

You can turn the key tone on or off for each handset. If you turn the key tone off, there are no beeps when you press the keys.

1. Press ⊕/OK when the phone is not in use.
2. Press ▼/▲ to choose **HS SETTINGS**, and then press ⊕/OK to select.
3. Press ▼/▲ to choose **TONE SETUP**, and then press ⊕/OK to select.
   - **KEY TONE** displays.
4. Press ⊕/OK to select.
5. Press ▼/▲ to choose **ON** or **OFF**.
6. Press ⊕/OK to save.
   - The screen returns to the previous menu.
   - You hear a confirmation tone.

Set alert tones on/off

1. Press ⊕/OK when the phone is not in use.
2. Press ▼/▲ to choose **HS SETTINGS**, and then press ⊕/OK to select.
3. Press ▼/▲ to choose **TONE SETUP**, and then press ⊕/OK to select.
4. Press ▼/▲ to choose **BATTERY TONE** or **OUT OF RANGE**.
5. Press ⊕/OK to select.
6. Press ▼/▲ to choose **ON** or **OFF**.
7. Press ⊕/OK to save.

Alarm

Set alarm on/off and alarm time

You can set the ALARM alert with handset.

Set alarm on:

1. Press ⊕/OK when the phone is not in use.
2. Press ▼/▲ to choose **HS SETTINGS**, and then press ⊕/OK to select.
3. Press ⊕/OK to select **ALARM**.
4. Press ▼/▲ to choose **ON** and then press ⊕/OK to select.
   - The screen displays **00-00**.
5. Enter the alarm time (in 12-hour or 24-hour setting, as set in the **TIME FORMAT** setting).
   - The screen displays **SNOOZE**, and press ⊕/OK to select it.
6. Press ▼/▲ to choose **ON** or **OFF**.
   - The screen returns to the previous menu. You hear a confirmation tone.

Set alarm off:

1. Press ⊕/OK when the phone is not in use.
2. Press ▼/▲ to choose **HS SETTINGS**, and then press ⊕/OK to select.
3. Press ⊕/OK to select **ALARM**.
4. Press ▼/▲ to choose **OFF**.
5. Press ⊕/OK to select.

Rename handset

You can rename the handset for your easy reference with the base.

1. Press ⊕/OK when the phone is not in use.
2. Press ▼/▲ to choose **HS SETTINGS**, and then press ⊕/OK to select.
3. Press ▼/▲ to choose **RENAME HS**, and then press ⊕/OK to select.
   - **HANDSET** _ displays; _ cursor flashes and you can rename the handset.
   - Press C/⊗| to delete a character or digit.
4. Press ⊕/OK to save.

Set auto answer

You can set your handset to auto answer the call once you lift it from the base.

1. Press ⊕/OK when the phone is not in use.
2. Press ▼/▲ to choose **HS SETTINGS**, and then press ⊕/OK to select.
3. Press ▼/▲ to choose **AUTO ANSWER**, and then press ⊕/OK to select.
4. Press ▼/▲ to choose **ON** or **OFF**.
5. Press ⊕/OK to save.
   - Press C/⊗| to return to previous menu.

Direct memory

There are three direct memory keys on the handset - dialing keys **1**, **2** and **3**. You can store a phone number into each of these keys and dial them directly when the phone is not in use.

Set direct memory numbers

1. Press ⊕/OK when the phone is not in use.
2. Press ▼/▲ to choose **HS SETTINGS**, and then press ⊕/OK to select.
3. Press ▼/▲ to choose **DIRECT MEM.**, and then press ⊕/OK to select.
4. Press ▼/▲ to choose **KEY 1**, **KEY 2** or **KEY 3**, and then press ⊕/OK to select.
   - When **NUMBER** displays, enter the number and then press ⊕/OK to save.
   - Press C/⊗| delete a digit or to return to previous menu.

Base settings

Ringer (ES2050 series only)

1. Press ⊕/OK when the phone is not in use.
2. Press ▼/▲ to choose **BS SETTINGS**, and then press ⊕/OK to select.
3. Press ⊕/OK to select **BS RINGER**.
4. Press ▼/▲ to select your preferred ringtone from **MELODY 1** to **MELODY 5**.
   - ⁘ displays next to the current selection.
5. Press ⊕/OK to save.
   - You hear a confirmation tone.

Set ringer volume (ES2050 series only)

You can set the ringer volume or turn the ringer off.

1. Press ⊕/OK when the phone is not in use.
2. Press ▼/▲ to choose **BS SETTINGS**, and then press ⊕/OK to select.
3. Press ▼/▲ to choose **RING VOLUME**, and then press ⊕/OK to select.
4. Press ▼/▲ to select from **VOLUME OFF** to **VOLUME 5**, and then press ⊕/OK to select and save.
   - ⁘ displays next to the current selection.

Delete handset

1. Press ⊕/OK when the phone is not in use.
2. Press ▼/▲ to choose **BS SETTINGS**, and then press ⊕/OK to select.
3. Press ▼/▲ to choose **DELETE HS**, and then press ⊕/OK to select.
   - **PIN? - - - -** displays; **- - - -** cursor flashes.
   - Default 4-digit PIN is **0000**.
   - Press C/⊗ to delete.
   - The PIN will be masked as ⁘⁘⁘⁘.
4. Enter the 4-digit PIN and then press ⊕/OK to confirm.
5. Press ▼/▲ to choose the desired handset to be deleted, and then press ⊕/OK to confirm.
   - Return to previous menu.
   - The deleted handset will be removed from the registered handsets list, and the antenna icon will disappear. **REGISTER** displays.

NOTE

- If the PIN is incorrect, the screen returns to the previous menu.

Set dial mode

The dial mode is preset to touch-tone dialing. If you have pulse (rotary) service, you need to change the dial mode to pulse dialing before using the telephone to make a call.

1. Press ⊕/OK when the phone is not in use.
2. Press ▼/▲ to choose **BS SETTINGS**, and then press ⊕/OK to select.
3. Press ▼/▲ to choose **DIAL MODE**, and then press ⊕/OK to select.
4. Press ▼/▲ to choose **TONE** or **PULSE**, and then press ⊕/OK to select.
   - ⁘ displays next to the selection.
   - The screen returns to the previous menu.
   - You hear a confirmation tone.

Change length of flash time

1. Press ⊕/OK when the phone is not in use.
2. Press ▼/▲ to choose **BS SETTINGS**, and then press ⊕/OK to select.
3. Press ▼/▲ to choose **FLASH TIME**, and then press ⊕/OK to select. There are 3 options:
   - **SHORT**
   - **MEDIUM** ⁘ (by default)
   - **LONG**
4. After you have selected, press ⊕/OK to confirm and save.
   - You hear a confirmation tone.

Change the system PIN

1. Press ⌯/OK when the phone is not in use.
2. Press ▼/▲ to choose **BS SETTINGS**, and then press ⌯/OK to select.
3. Press ▼/▲ to choose **CHANGE PIN**, and then press ⌯/OK to select.
   - **OLD PIN? - - - -** displays; **- - - -** cursor flashes.
   - Default 4-digit PIN is **0000**.
   - Press C/⊗ to delete.
   - The PIN will be masked as ✣✣✣✣.
4. Enter the current 4-digit PIN and then press ⌯/OK to confirm.
   - If the old PIN is correct, it will show **NEW PIN? - - - -** with **- - - -** cursor flashes.
5. Enter the new PIN, and press ⌯/OK.
6. Re-enter the new PIN to double confirm.
7. Press ⌯/OK to save.

Turn on/off ECO mode

You can reduce transmission power by setting the ECO mode.

1. Press ⌯/OK when the phone is not in use.
2. Press ▼/▲ to choose **BS SETTINGS**, and then press ⌯/OK to select.
3. Press ▼/▲ to choose **ECO MODE**, and then press ⌯/OK to select.
4. Press ▼/▲ to choose **ON** or **OFF**.
   - **OFF** ✣ is the default setting.
5. Press ⌯/OK to save.
   - Press C/⊗ to return to previous menu.

Register a handset

When your handset is deregistered from the telephone base, follow the steps below to register it back to the telephone base.

1. Remove the handset from the telephone base.
2. Press ⌯/OK when the phone is not in use.
3. Press ▼/▲ to choose **REGISTRATION**, and then press ⌯/OK to select.
   - **PIN? - - - -** displays; **- - - -** cursor flashes.
4. Enter the 4-digit system PIN, and press ⌯/OK. (Default: **0000**)

   Press and hold 📱 at the telephone base for about five seconds.
   - **PLEASE WAIT** displays.
   - **REGISTER!** displays if the handset fails to register to the base.
   - If handset is registered to the base sucessfully, the base will assign next available handset number to the handset automatically.
   - You hear a beep when the registration process completes.
   - The registration process takes about 60 seconds complete.

NOTE

- If your handset is new, make sure you charge it before attempting registration.

Reset phone settings

You can reset your phone to the default settings. After reset, all settings and entries (except phonebook) will be deleted.

1. Press ⌯/OK when the phone is not in use.
2. Press ▼/▲ to choose **DEFAULT**, and then press ⌯/OK to select.
   - **PIN? - - - -** displays; **- - - -** cursor flashes.
3. Enter the 4-digit system PIN, and press ⌯/OK. (Default: **0000**)
4. Press ⌯/OK to confirm.

Answering machine and settings (ES2050 series only)

Set your built-in answering machine

The answering machine can record and store up to 99 messages. Each message can be up to three minutes in length. The total storage capacity for the outgoing message, messages and memos is approximately 30 minutes. The actual recording time depends on individual message characteristics.

Your answering machine allows you to set your outgoing message, to save and delete messages, activate call screening, to set number of rings before pick up, and to access remotely.

NOTE

- Make sure you **Set date and time** correctly.

Set the answer mode

The answering machine has two types of answer mode. One is **ANS & REC**, and the other one is **ANSWER ONLY**.
ANS & REC is the default setting, and it answers the calls and allows callers to leave a message. **ANSWER ONLY**, on the other hand, only answer the calls but it does not allow callers to leave any messages. It will prompt callers to call back later.

1. Press ⇳/OK when the phone is not in use.
2. Press ⇳/OK to select **ANS. MACHINE**.
3. Press ▼/▲ to scroll to **TAM SETTINGS**, and press ⇳/OK to select.
4. Press ⇳/OK to select **ANSWER MODE**.
5. Press ▼/▲ to select **ANS & REC** or **ANSWER ONLY**.
6. Press ⇳/OK to confirm.

Select the answering machine language

1. Press ⇳/OK when the phone is not in use.
2. Press ⇳/OK to select **ANS. MACHINE**.
3. Press ▼/▲ to scroll to **TAM SETTINGS**, and press ⇳/OK to select.
4. Press ▼/▲ to scroll to **TAM LANGUAGE**, and press ⇳/OK to select. Select from the following languages:
   - **ENGLISH**;
   - **DEUTSCH**; and
   - **FRANCAIS**.

Default outgoing message

The telephone is preset with a greeting that answers calls with *"Hello. Your call cannot be taken at the moment. So please leave your message after the tone."* You can use this preset outgoing message, or replace it with your own.

Record your own outgoing message

1. Press ⇳/OK when the phone is not in use.
2. Press ⇳/OK to select **ANS. MACHINE**.
3. Press ▼/▲ to scroll to **TAM SETTINGS**, and press ⇳/OK to select.
4. Press ▼/▲ to scroll to **OGM SETTINGS**, and press ⇳/OK to select.
5. Press ▼/▲ to scroll to **ANS & REC** or **ANSWER ONLY** and press ⇳/OK to select.
6. Press ▼/▲ to scroll to **RECORD MESS**, and press ⇳/OK to select.
7. During **RECORDING**, select and press ⇳/OK to stop and save the recording and return to previous menu option.
   - Select and press C/⊗ to stop the recording without saving and return to previous menu option.
   - Maximum recording length is 3 minutes.

Play and delete your outgoing message

1. Press ⇳/OK when the phone is not in use.
2. Press ⇳/OK to select **ANS. MACHINE**.
3. Press ▼/▲ to scroll to **TAM SETTINGS**, and press ⇳/OK to select.
4. Press ▼/▲ to scroll to **OGM SETTINGS**, and press ⇳/OK to select.
5. Press ▼/▲ to scroll to **ANS & REC** or **ANSWER ONLY**, and press ⇳/OK to select.
6. Press ▼/▲ to scroll to **PLAYBACK**, and press ⇳/OK to select.
7. During **PLAYING**, select ⇳/OK to stop the outgoing message playback and return to previous menu option.
   - Select C/⊗ to delete your outgoing message and return to previous menu option.
   - Default outgoing message cannot be deleted.

NOTE

- After you deleted your own recorded outgoing message, the answering machine answers calls with the default outgoing message.

Options during playback

- Press ▼/▲ on the cordless handset to adjust the listening volume.
- Press 🔊 to switch between the speakerphone and handset earpiece.

Set answer delay

Use this feature to set the number of rings for the answering machine to pick up the incoming call.

1. Press ⊹/OK when the phone is not in use.
2. Press ⊹/OK to select **ANS. MACHINE**.
3. Press ▼/▲ to scroll to **TAM SETTINGS**, and press ⊹/OK to select.
4. Press ▼/▲ to scroll to **ANSWER DELAY**, and press ⊹/OK to select.
5. Press ▼/▲ to select between **TIME SAVER**, **2 RINGS**, **4 RINGS**, **6 RINGS**, or **8 RINGS**. Press ⊹/OK to save the settings and return to previous menu option.
   - Press C/⊗ to return to previous menu option without changing and saving.

Set record time

Use this feature to set the message recording time.

1. Press ⊹/OK when the phone is not in use.
2. Press ⊹/OK to select **ANS. MACHINE**.
3. Press ▼/▲ to scroll to **TAM SETTINGS**, and press ⊹/OK to select.
4. Press ▼/▲ to scroll to **RECORD TIME**, and press ⊹/OK to select.
5. Press ▼/▲ to select between **60S**, **120S**, **180S**, or **UNLIMITED**.
   - Select and press ⊹/OK to save the settings and back to previous menu option.
   - Select C/⊗ to return to previous menu option without changing and saving.

Turn on/off the call screening

Use this feature to choose whether incoming messages can be heard while they are being recorded.

1. Press ⊹/OK when the phone is not in use.
2. Press ⊹/OK to select **ANS. MACHINE**.
3. Press ▼/▲ to scroll to **TAM SETTINGS** then press ⊹/OK to select.
4. Press ▼/▲ to scroll to **BS SCREENING**, then press ⊹/OK to select.
5. Press ▼/▲ to choose **ON** or **OFF**.
6. Press ⊹/OK to save.
   - You hear a confirmation tone.

Turn on/off remote access

You can turn on or off the remote access feature to access your messages.

1. Press ⊹/OK when the phone is not in use.
2. Press ⊹/OK to select **ANS. MACHINE**.
3. Press ▼/▲ to scroll to **TAM SETTINGS**, and then press ⊹/OK to select.
4. Press ▼/▲ to scroll to **REMOTE ACC.**, and then press ⊹/OK to select.
5. Press ▼/▲ to select **ON** or **OFF**.
6. Select and press ⊹/OK to save.
   - You hear a confirmation tone.

Change the remote access PIN

Make sure that Remote Access is turned on and then you can ring your phone from another tone-dialling phone to switch the answering machine on or off, and/or listen to your messages remotely. You can set your own remote access code. Default PIN is **0000**.

1. Press ⌖/OK when the phone is not in use.
2. Press ⌖/OK to select **ANS. MACHINE**.
3. Press ▼/▲ to scroll to **TAM SETTINGS**, and then press ⌖/OK to select.
4. Press ▼/▲ to scroll to **CHANGE PIN**, and then press ⌖/OK to select.
   - The display shows **OLD PIN?----**
   - Default PIN is **0000**.
5. Enter your current 4-digit remote access PIN.
   - The PIN is masked as ****.
6. Press ⌖/OK to enter or C/⊗ to cancel.
   - If you entered the correct current remote access PIN, the display shows **NEW PIN?----**; **- - - -** cursor flashes.
7. Enter your preferred 4-digit new PIN.
   - The PIN is masked as ****.
   - The PIN must be 4-digit, otherwise, it will not proceed to confirmation page.
8. Re-enter the new PIN in confirm page. Press ⌖/OK to save and confirm.
   - You hear a confirmation tone.

General product care

Taking care of your telephone

Your cordless telephone contains sophisticated electronic parts, so it must be treated with care.

Avoid rough treatment

Place the handset down gently. Save the original packing materials to protect your telephone if you ever need to ship it.

Avoid water

Your telephone can be damaged if it gets wet. Do not use the handset outdoors in the rain, or handle it with wet hands. Do not install the telephone base near a sink, bathtub or shower.

Electrical storms

Electrical storms can sometimes cause power surges harmful to electronic equipment. For your own safety, take caution when using electrical appliances during storms.

Cleaning your telephone

Your telephone has a durable plastic casing that should retain its luster for many years. Clean it only with a dry non-abrasive cloth. Do not use dampened cloth or cleaning solvents of any kind.

Storage

When you are not going to use the telephone for some time, unplug the adapter(s), and remove the rechargeable battery from the handset. Store the telephone base, the handset, the charger(s) and the adapter(s) in a cool and dry place.

Frequently asked questions

Below are the questions most frequently asked about the cordless telephone. If you cannot find the answer to your question, visit our website at www.vtechphones.eu.

My telephone does not work at all.	Make sure the telephone base is installed properly, and battery is installed and charged correctly. For optimum daily performance, return the handset to the telephone base after use.
The display shows No line. I cannot hear the dial tone.	Disconnect the telephone line cord from your telephone and connect it to another telephone. If there is no dial tone on that other telephone either, then the telephone line cord may be defective. Try installing a new telephone line cord. If changing the telephone line cord does not help, the wall jack (or the wiring to this wall jack) may be defective. Contact your telephone service provider.
	You may be using a new cable or VoIP service, the existing telephone jacks in your home may no longer work. Contact your service provider for solutions.
I cannot dial out.	Make sure there is a dial tone before dialing. It is normal if the handset takes a second or two to synchronize with the telephone base before producing a dial tone. Wait an extra second before dialing.
	Eliminate any background noise. Mute the handset before dialing, or dial from another room in your home with less background noise.

Go to **www.vtechphones.eu** **(UK)** for the latest VTech product news.

Specifications are subject to change without notice.
© 2022 VTech Communications, Inc.
All rights reserved. v1.0. 12/22
ES200x_ES205x_UK_WEBCIB_v1.0_221214